THIS DRAWING IS UNPUBLISHED. RELEASED FOR PUBLICATION –,– .
© COPYRIGHT – BY TYCO ELECTRONICS CORPORATION. ALL RIGHTS RESERVED.

LOC	DIST
AJ	16

REVISIONS

P	LTR	DESCRIPTION	DATE	DWN	APVD
	B	REVISED PER ECO-05-007687	02SEP05	BM	KW

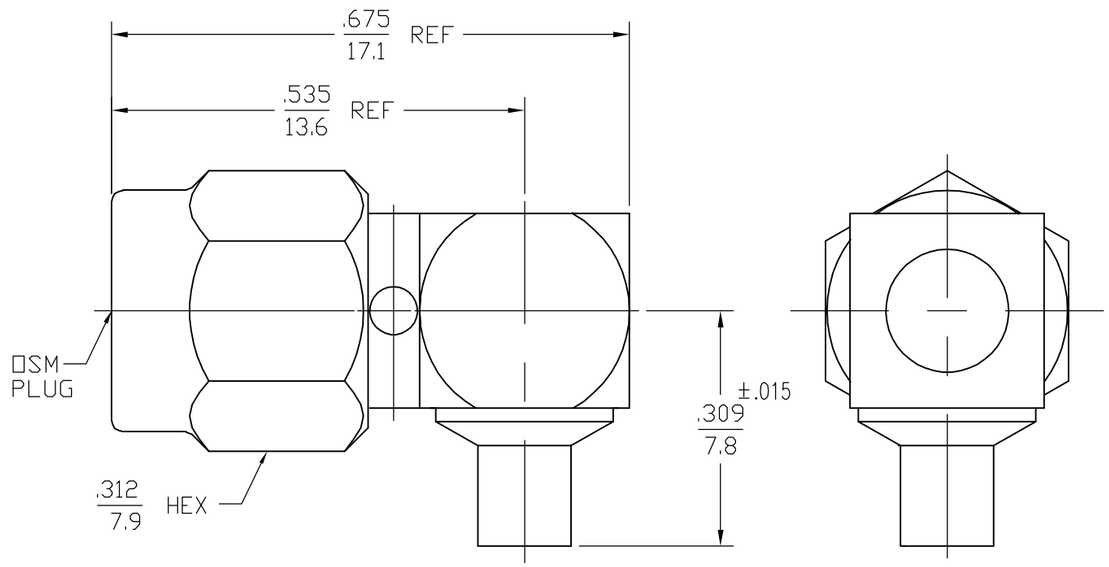

1. DESIGNED FOR USE WITH .085 SEMI-RIGID CABLE.
   CABLE ENTRY DIAMETER: HOUSING: .088 MIN
   CONTACT: .037 MIN
2. USE INSTRUCTION SHEET 408-4944.

ELECTRICAL	MECHANICAL	ENVIRONMENTAL
Nominal Impedance (Ohms) 50	Interface Dimensions MIL-STD-348A,	TEMPERATURE RATING -65°C TO +165°C
Frequency Range (GHz) DC to 18	Fig. 310.1	Vibration MIL-STD-202, Method
Volt Rating (VRMS MAX)	Recommended Mating	204, Condition D.
@ Sea Level 335	Torque 7-10 in-lbs	Shock MIL-STD-202, Method 213,
VSWR 1.18 +.015F (GHz)	Mating Characteristics:	Condition I.
Insertion Loss (dB MAX) .05 $\sqrt{f(GHz)}$	Insertion (MAX Lbs) N/A	Thermal Shock MIL-STD-202,
RF Leakage (dB MIN) -90 @ 2-3 GHz	Withdrawal (MIN Oz) N/A	Method 107, Condition B,
Corona, 70,000 Ft (VRMS MIN) 250	Force to Engage and	EXCEPT HIGH TEMP +115°C
Dielectric Withstanding Voltage	Disengage (In-Lbs MAX) 2.0	Moisture Resistance MIL-STD-202,
(VRMS MIN) @ Sea Level 1,000	Center Contact Captivation	Method 106
Contact Resistance (Milliohms MAX)	Axial (Lbs) 6.0	Corrosion - MIL-STD-202, Method
Center Contact 4.0	Radial (In-Oz) N/A	101, Condition B, 5% salt spray
Outer Contact 2.0	Cable Retention	
Cable to Housing 0.5	Axial Force (Lbs MIN) 30	
RF High Potential @ Sea Level	Torque (In-Oz) 16	
(VRMS MIN @ 5 MHz) 670	Weight (Grams) TBD	
I.R.(Megohms MIN) 5,000		

COMPONENT	MATERIAL	FINISH
HOUSING COUPLING NUT CAP	STAINLESS STEEL PER ASTM-A484 AND ASTM-A582, TYPE 303	GOLD PLATE PER MIL-G-45204
DIELECTRIC	TFE FLUOROCARBON PER ASTM-D-1457	N/A
CENTER CONTACT	BERYLLIUM COPPER PER ASTM B 196, ALLOY C17300, CONDITION H	GOLD PLATE PER MIL-G-45204
RETAINING RING	BERYLLIUM COPPER PER ASTM B 194, ALLOY C17200, CONDITION H	N/A
GASKET	SILICONE RUBBER PER ZZ-R-765	N/A

1051113-1
PART NUMBER

THIS DRAWING IS A CONTROLLED DOCUMENT.

DIMENSIONS: INCHES[mm]

TOLERANCES UNLESS OTHERWISE SPECIFIED:
0 PLC ±–
1 PLC ±–
2 PLC ±–
3 PLC ±.005[0.12]
4 PLC ±–
ANGLES ±1°

MATERIAL –
FINISH –

DWN R.B.G. 11-18-76
CHK E.C.A. 12-2-76
APVD R.M.F. 12-2-76
PRODUCT SPEC —
APPLICATION SPEC —
WEIGHT —

tyco Electronics
Tyco Electronics Corporation
Harrisburg, PA 17105-3608

NAME
OSM HIGH FREQUENCY, RIGHT ANGLE
CABLE PLUG DIRECT SOLDER

SIZE	CAGE CODE	DRAWING NO	RESTRICTED TO
A3	00779	C-1051113-1	—

CUSTOMER DRAWING | SCALE 5:1 | SHEET 1 OF 1 | REV B

AMP 1470-19 REV 31MAR2000